9111 Series

H.D. 2.0mm(0.079") Futurebus(+)4 Rows Male Straight Type

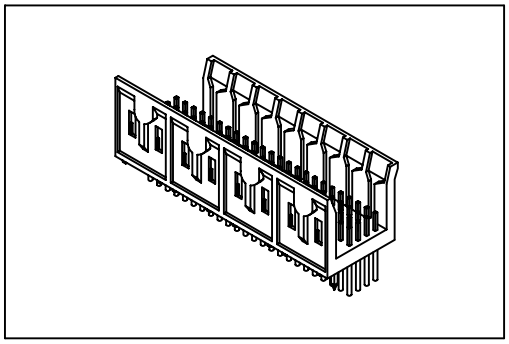

Material:

Housing: Liquid Crystal Polymer(LCP) UL94V-0.
Contacts: Brass.

Electrical Characteristics:

Current Rating: 1 AMP.
Dielectric Withstanding Voltage: AC 1000V For 1 minute.
Insulator Resistance: 1000MΩmin. at DC 500V.
Contact Resistance: 30mΩmax. at DC 100mA.
Operating Temperature: -65°C ~+125°C .

Features:

* 2mm high density futurebus+ male solder type.
* Available pin count from 24~192.
* Side by side stackable.
* Various solder tail length options.
* Push-Fit peg.

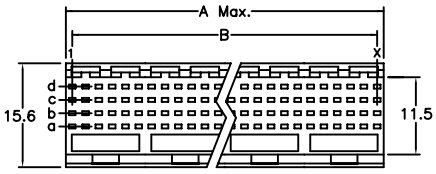

Dip Type

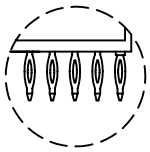

Press Fit Type

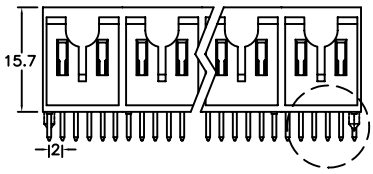

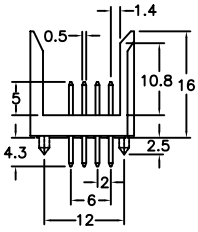

Option A

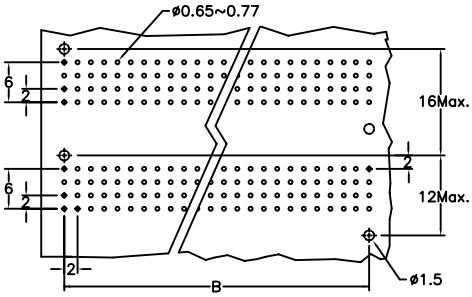

P.C. Board Layout

Position	Dimension	
	A	B
24	11.95	10
48	23.95	22
72	35.95	34
96	47.95	46
120	59.95	58
144	69.95	70
168	83.95	82
192	95.95	94

Ordering information

9111-	4	1	24	A	C	10	D	U
Series	4: 4Rows	1: Male Signal	Position	A: A ~ V See Page CB21	C: Dip Tin Contact Gold G: Gold	10: 10μ" 30: 30μ"	D: Dip Type P: Press Fit Type	U: Tube Package