9001 Series

DIN41612 H15 Type Female

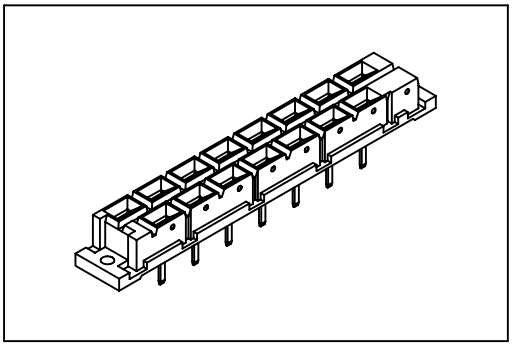

Material:

Housing: 30% Glass filled PBT UL94V-0.
Contacts: Phosphor Bronze.

Electrical Characteristics:

Current Rating: 15 AMP.
Dielectric Withstanding Voltage: AC 3100V For 1 minute.
Insulator Resistance: 1000MΩmin. at DC 500V.
Contact Resistance: 8mΩmax. at DC 100mA.
Operating Temperature: -55°C~+105°C.

Features:

* Power connectors.
* Mates with 9001-51151T.

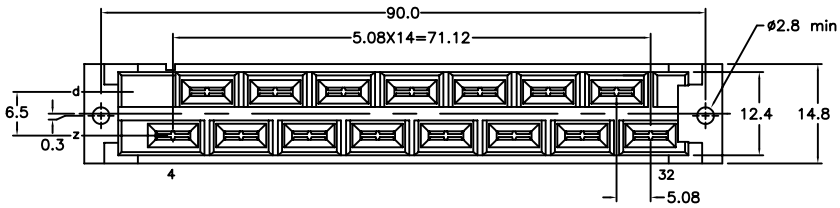

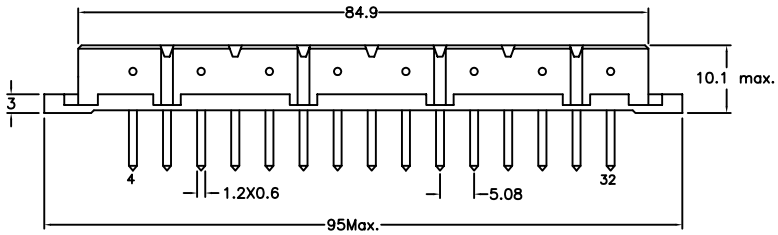

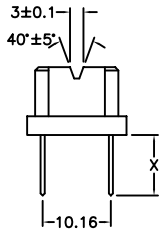

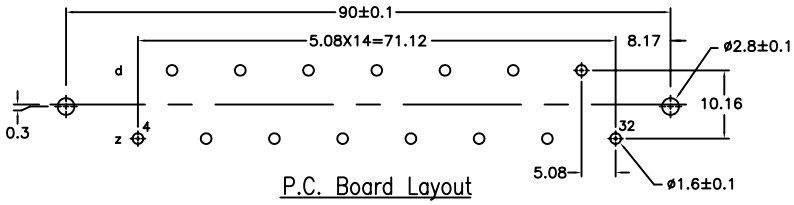

P.C. Board Layout

X length	1	2
	4.0	10.0

Ordering information

9001-	52	15	1	A	A
Series	2: Female	Position	1: Dip Length 2: Dip Length	A: AG/NI Plating T: TIN/NI Plating	A: Tray Package