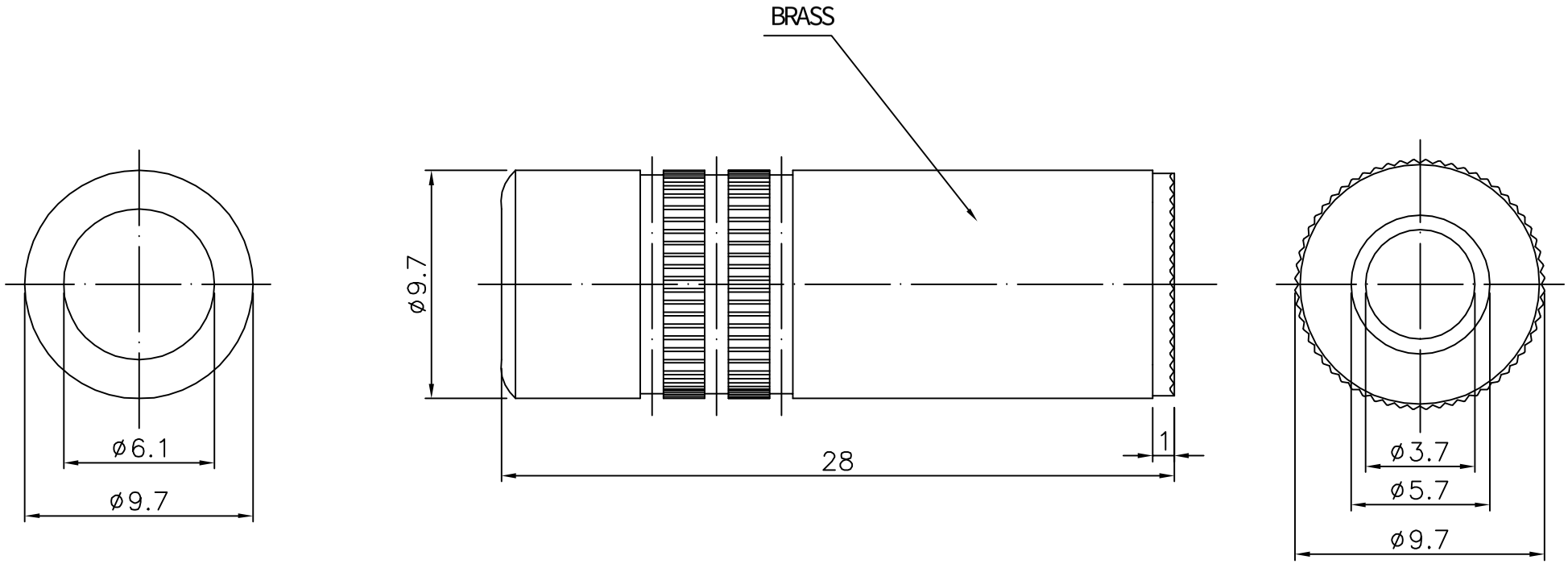

				DESCRIPTION	成 品 图	SCALE	4/1 UNTTS:MM	SRD ANGLE
				MODEL NO	FR1203	△		
APPROVED	CHECKED	DRAWING	DESIGNED	DRAWING NO		△		
		ZHT	ZHT	FINISHING		△	2012/5/29	
				MATERIAL		SYE	DATE	REVISION